NetBuilder' class diagram

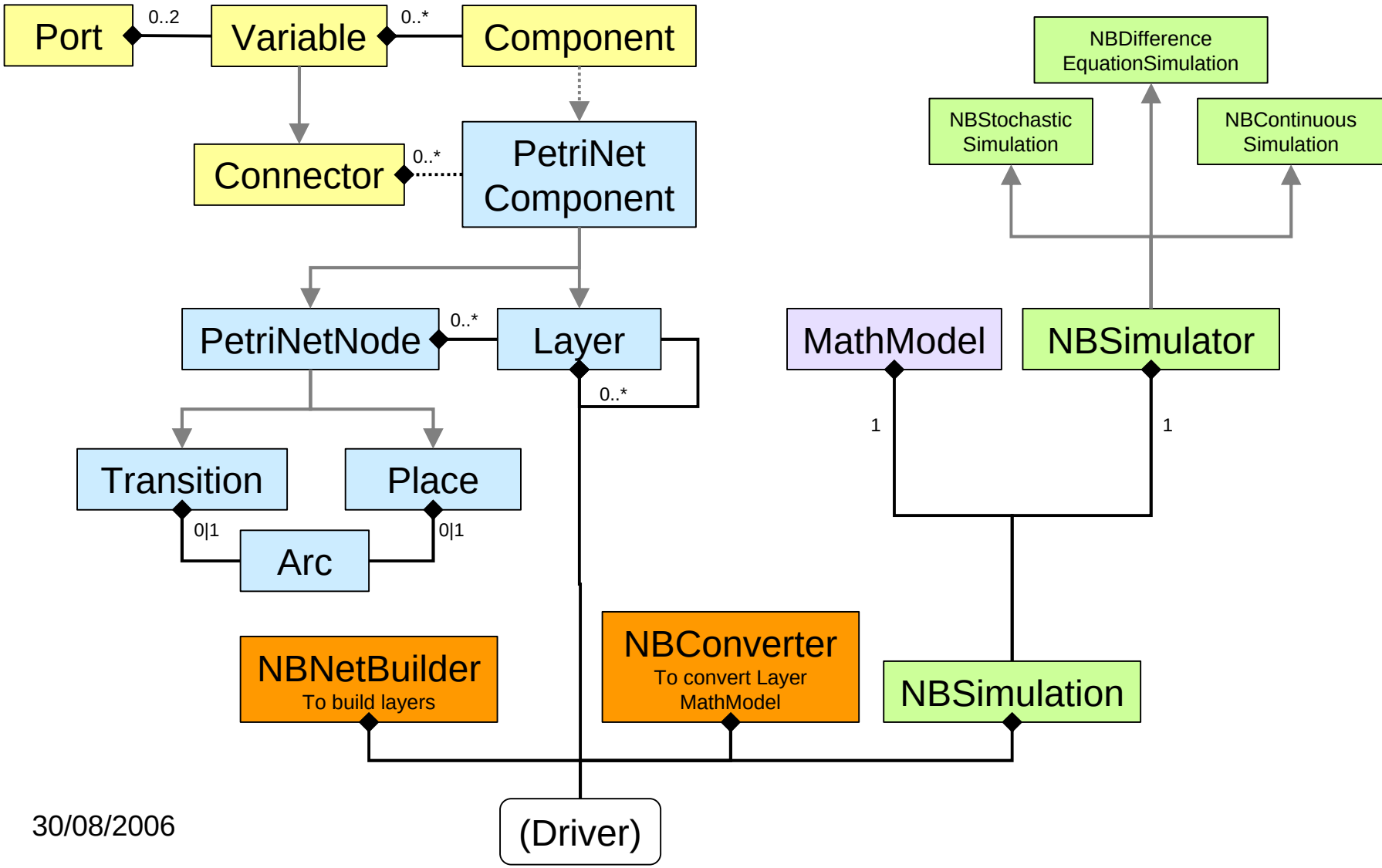

30/08/2006